Mica

96271529 <MICA SLIM I 15L25 SOFT RGB DMX AL FR

IP67	IK10				

Mica

A large, shallow, round ground recessed luminaire. 15 LED (s) driven at 250mA by integral driver for driveover guidance applications. Body: die-cast aluminium with powdered paint finish. Frame: painted aluminium, 3mm thick. Front glass: frosted toughened glass, mm thick, surface temperature complies with EN60598-2-13. Pre-wired with 0.5m cable. Recessing box: polypropylene. Rated IP67, class I electrical. Maximum static load 3500kg. Complete with RGB LEDs. DMX drivers included.

Mica and Mica Slim can be installed in areas with a maximum low speed of 30km/h for the flat versions and 20km/h for the dome versions.

Dimensions: Ø300 x 200 mm

Weight: 8.49 kg

TLG_MICA_F_SIALFR.jpg

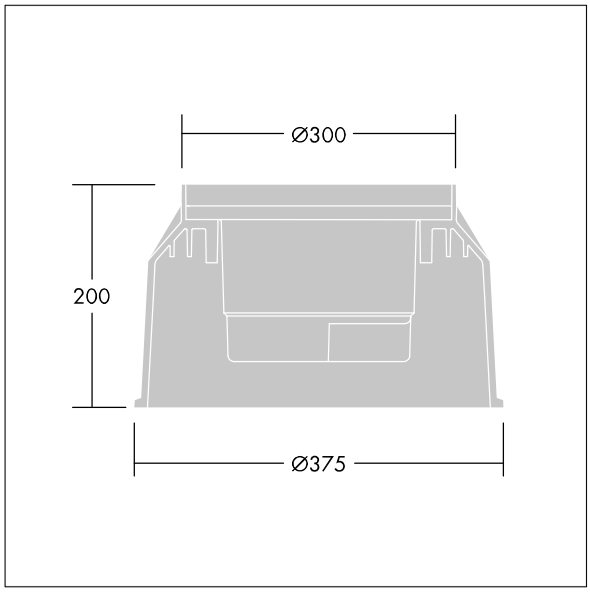

TLG_MICA_M_2015LDSLMIAL.wmf

All values marked with an * are rated values. Unless stated otherwise, the values apply to an ambient temperature of 25°C.

Thorn Lighting is constantly developing and improving its products. The right is reserved to change specifications without prior notification or public announcement.
© Thorn Lighting