THORN

96634781 <CHAL PRO LED1400-927-65 HFIX RMB

IP20 IP54 | IK03 | 850°C | T_a25

A recessed LED downlight. Remote DALI dimmable control gear. IP54 (IP20 from above), Class I electrical. Body: aluminium, painted white (RAL 9016). Reflector: satinbrite. Suitable for mounting in ceiling thicknesses of 1-40mm in a Ø150mm cut-out. Complete with VCT technology (variable colour temperature), stepless tunable from 2700-6500K..

Dimensions: Ø172 x 94 mm
Luminaire input power: 21.5 W
Luminaire luminous flux: 1400 lm
Luminaire efficacy: 65 lm/W
Weight: 0.61 kg

TLG_CHLP_F_RMBPDB.jpg

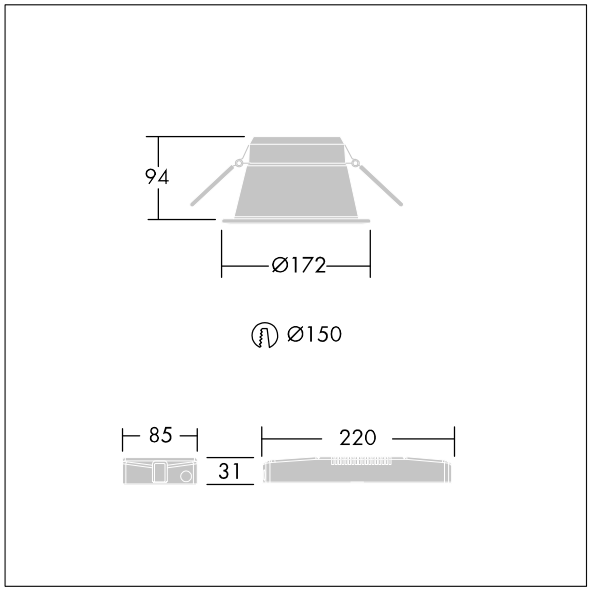

TLG_CHLP_M_DL1.wmf

This product contains a light source of energy efficiency class D.

All values marked with an * are rated values. Thorn uses tried and tested components from leading suppliers, however there may be isolated instances of technology-related failures of individual LEDs during the rated product lifetime. International standards set the tolerance in initial flux and connected load at ±10%. Unless stated otherwise, the values apply to an ambient temperature of 25°C.

Thorn Lighting is constantly developing and improving its products. The right is reserved to change specifications without prior notification or public announcement.
© Thorn Lighting