Urba

96269937 <URBA L 48L70 740 NR BP CL2 T60E W10 ANT

ISO 9223 C3		IP66	IK09		CE		

Urba

A large size LED urban street lighting lantern with 48 LEDs driven at 700mA with Narrow Road optic. Electronic, fixed output control gear. Class II electrical, IP66, IK09. Body: die-cast aluminium, textured dark grey. Cover: tempered flat clear glass. Pre-wired with 10m cable. Post top mounting to Ø60mm column. Integral power reduction function which dims down to 50% power, effective 3 hours before and 5 hours after a calculated midnight. Complete with 4000K LED.

Dimensions: 1078 x 400 x 357 mm
Luminaire input power: 103 W
Weight: 16 kg
Scx: 0.13 m²

TLG_URBA_F_LMTPGYPDB.jpg

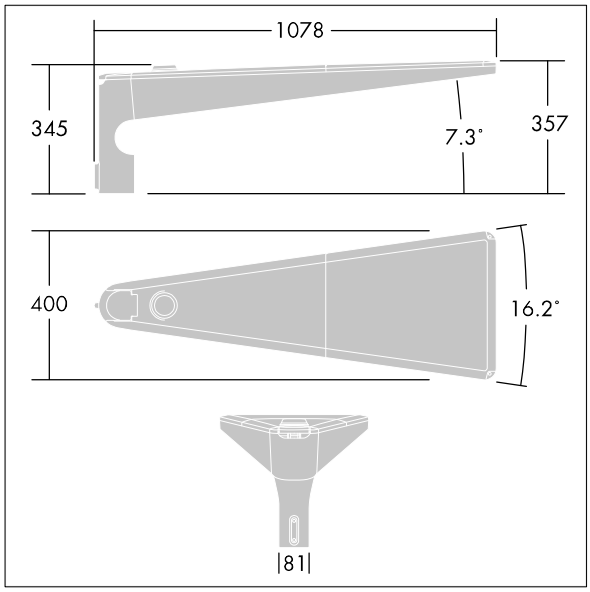

TLG_URBA_M_MTP60L.wmf

This product contains a light source of energy efficiency class D.

All values marked with an * are rated values. Thorn uses tried and tested components from leading suppliers, however there may be isolated instances of technology-related failures of individual LEDs during the rated product lifetime. International standards set the tolerance in initial flux and connected load at ±10%. Unless stated otherwise, the values apply to an ambient temperature of 25°C.

Thorn Lighting is constantly developing and improving its products. The right is reserved to change specifications without prior notification or public announcement.
© Thorn Lighting