Mica

96271471 MICA SLIM SS 1L35 SOFT 832 RS FR

IP67	IK10				

Mica

A small, shallow, round ground recessed luminaire. 1 LED (s) driven at 350mA by integral driver for driveover guidance applications. Body: die-cast aluminium with powdered paint finish. Frame: stainless steel, 3mm thick. Front glass: frosted toughened glass, mm thick, surface temperature complies with EN60598-2-13. Pre-wired with 0.5m cable. Recessing box: polypropylene. Rated IP67, class I electrical. Maximum static load 5000kg. Complete with 3200K LED

Mica and Mica Slim can be installed in areas with a maximum low speed of 30km/h for the flat versions and 20km/h for the dome versions.

Dimensions: Ø113 x 178 mm

Weight: 1.64 kg

TLG_MICA_F_SSSRSFR.jpg

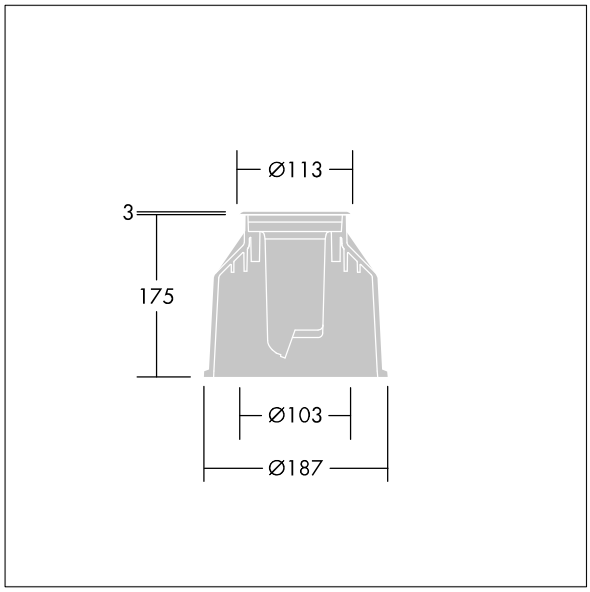

TLG_MICA_M_2015LDSLMSSRS.wmf

This product contains a light source of energy efficiency class E.

All values marked with an * are rated values. Unless stated otherwise, the values apply to an ambient temperature of 25°C.

Thorn Lighting is constantly developing and improving its products. The right is reserved to change specifications without prior notification or public announcement.
© Thorn Lighting