Mica

96271538 MICA SLIM S 3L35 ACC 23D 840 RS SF

IP67 | IK10

Mica

A small, shallow, round ground recessed luminaire. 3 LED (s) driven at 350mA by integral driver. 23° beam angle for driveover illumination applications. Tilting angle adjustment of ±15°. Body: die-cast aluminium with powdered paint finish. Frame: stainless steel, 3mm thick. Front glass: semi-frosted toughened glass, mm thick, surface temperature complies with EN60598-2-13. Pre-wired with 0.5m cable. Recessing box: polypropylene. Rated IP67, class I electrical. Maximum static load 5000kg. Complete with 4000K LED

Mica and Mica Slim can be installed in areas with a maximum low speed of 30km/h for the flat versions and 20km/h for the dome versions.

Dimensions: Ø165 x 178 mm
Luminaire input power: 4.3 W
Luminaire luminous flux: 195 lm
Luminaire efficacy: 45 lm/W
Weight: 2.6 kg

TLG_MICA_F_SS3LEDRSSF.jpg

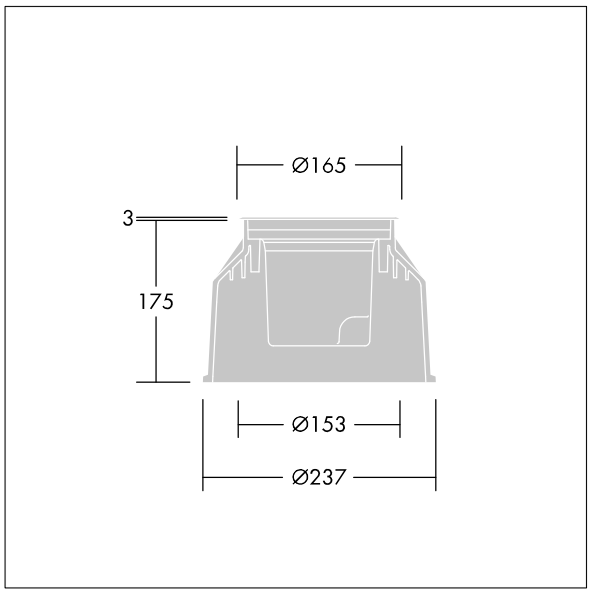

TLG_MICA_M_2015LDSLMSRS.wmf

This product contains a light source of energy efficiency class E.

All values marked with an * are rated values. Thorn uses tried and tested components from leading suppliers, however there may be isolated instances of technology-related failures of individual LEDs during the rated product lifetime. International standards set the tolerance in initial flux and connected load at ±10%. Unless stated otherwise, the values apply to an ambient temperature of 25°C.

Thorn Lighting is constantly developing and improving its products. The right is reserved to change specifications without prior notification or public announcement.
© Thorn Lighting

Mica

96271538 MICA SLIM S 3L35 ACC 23D 840 RS SF

Thorn Lighting is constantly developing and improving its products. The right is reserved to change specifications without prior notification or public announcement.
© Thorn Lighting