Omega Circular

96627783 <OMEGA C LED3200-830 HF E3 R500

IP20 | IK02 | Ta 0 +25

Omega Circular

A versatile, circular edge lit panel for recessed mounting in a Ø200mm cutout. Electronic, fixed output control gear with 3 hour, manual test, emergency lighting circuit. Class I electrical, IP20. Body: aluminium and steel, white (RAL 9016). Diffuser: acrylic opal. Complete with 3000K LED.

Dimensions: Ø500 x 55 mm
Luminaire input power: 42 W
Luminaire luminous flux: 3374 lm
Luminaire efficacy: 80 lm/W
Weight: 4.5 kg

TLG_OMGC_F_PDB.jpg

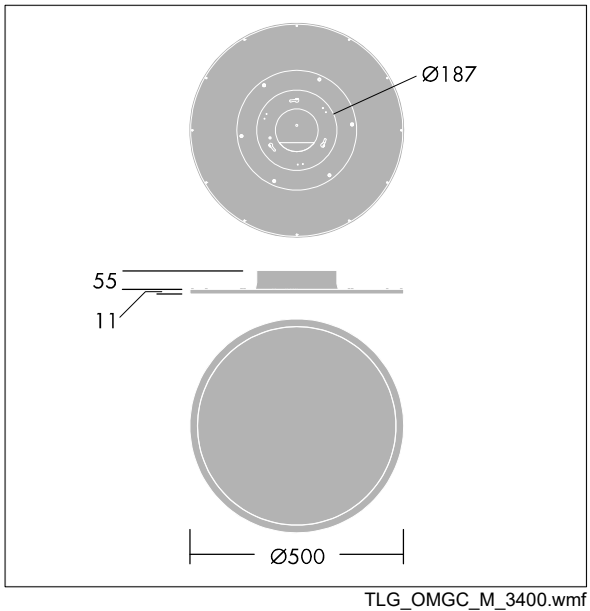

TLG_OMGC_M_3400.wmf

This product contains a light source of energy efficiency class E.

All values marked with an * are rated values. Thorn uses tried and tested components from leading suppliers, however there may be isolated instances of technology-related failures of individual LEDs during the rated product lifetime. International standards set the tolerance in initial flux and connected load at ±10%. Unless stated otherwise, the values apply to an ambient temperature of 25°C.

Thorn Lighting is constantly developing and improving its products. The right is reserved to change specifications without prior notification or public announcement.
© Thorn Lighting