CiviTEQ

96643227 CQ 36L70 757 IVS CL2 M60 GY-S

ISO 9223 C5 | IP66 | IK08 | Ta25

CiviTEQ

A small size LED road lighting lantern with 36 LEDs driven at 700mA with Pedestrian Crossing optic. Electronic, fixed output control gear. Class II electrical, IP66, IK08. Housing: die-cast aluminium (EN AC-44300), Light grey 150 sanded textured (close to RAL9006). Enclosure: toughened flat. Screws: stainless steel, Ecolubric® treated. Supplied with Ø60mm spigot adaptor which can be fitted for post-top (0°/5°/10° tilt) or side-entry (-20°/-15°/-10°/-5°/0° tilt). Complete with 5700K LED. Surge protection: 10kV single pulse common mode and 8kV multipulse common mode and 6kV multipulse differential mode. If permanent DALI system is connected, 6kV multipulse common and differential mode.

Dimensions: 390 x 230 x 133 mm
Luminaire input power: 77 W
Luminaire luminous flux: 9301 lm
Luminaire efficacy: 121 lm/W
Weight: 5.7 kg
Scx: 0.077 m²

TLG_CTEQ_F_SMTP36LEDPDB.jpg

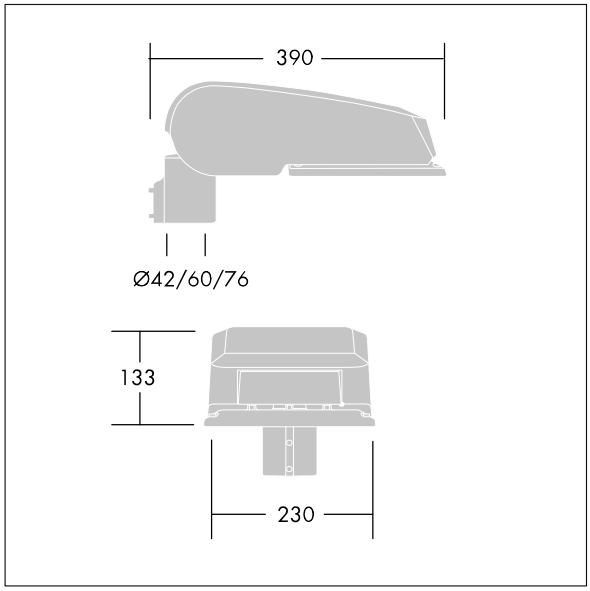

TLG_CETQ_M_S.wmf

This product contains a light source of energy efficiency class D.

All values marked with an * are rated values. Thorn uses tried and tested components from leading suppliers, however there may be isolated instances of technology-related failures of individual LEDs during the rated product lifetime. International standards set the tolerance in initial flux and connected load at ±10%. Unless stated otherwise, the values apply to an ambient temperature of 25°C.

Thorn Lighting is constantly developing and improving its products. The right is reserved to change specifications without prior notification or public announcement.
© Thorn Lighting

CiviTEQ

96643227 CQ 36L70 757 IVS CL2 M60 GY-S

Thorn Lighting is constantly developing and improving its products. The right is reserved to change specifications without prior notification or public announcement.
© Thorn Lighting