R2L2

96630733 RX 36L70-740 NR BS 3550 CL2 ANT

ISO 9223 C5	IP66	IK09						T_a25

R2L2

An extra small size LED road lighting lantern with 36 LEDs driven at 700mA with Narrow Road optic. Programmable LED driver. Class II electrical, IP66, IK09. Housing: die-cast aluminium (EN AC-44300), powder coated textured anthracite (close to RAL7043). Enclosure: tempered flat glass. Screws: stainless steel, Ecolubric® treated. Post top (Ø60/76mm, tilted 0°/5°/10°) or lateral (Ø34/42/49/60mm, tilted 0°/-5°/-10°/-15°) mounting. For lateral mounting to Ø34/42mm spigots an adaptor (59005840 R2L2 MA34/42 NPA) should be ordered separately. Equipped with 50% power reduction circuit, effective 3 hours before and 5 hours after a calculated midnight. It can be deactivated at installation with an easily accessible internal switch. Complete with 4000K LED.

Dimensions: 598 x 232 x 149 mm
Luminaire input power: 75.2 W
Luminaire luminous flux: 11912 lm
Luminaire efficacy: 158 lm/W
Weight: 7.7 kg
Scx: 0.05 m²

TLG_R2L2_F_XS_MTP_PDBANT.jpg

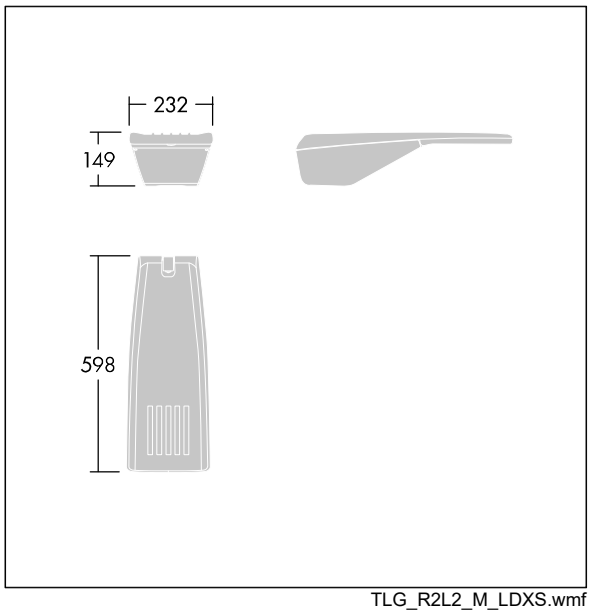

TLG_R2L2_M_LDXS.wmf

This product contains a light source of energy efficiency class E.

All values marked with an * are rated values. Thorn uses tried and tested components from leading suppliers, however there may be isolated instances of technology-related failures of individual LEDs during the rated product lifetime. International standards set the tolerance in initial flux and connected load at ±10%. Unless stated otherwise, the values apply to an ambient temperature of 25°C.

Thorn Lighting is constantly developing and improving its products. The right is reserved to change specifications without prior notification or public announcement.
© Thorn Lighting