Flow

92940344 FW 24L50 740 NR CL2 T60F ANT

ISO 9223 C5		IP66	IK10		CE			T_a -30 +25

Flow

A highly versatile LED lantern with a Narrow Road, asymmetric distribution. Electronic, fixed output control gear driving 24 LEDs at 500mA. Compatible with PL, LRT, 7 pin Nema socket. Class II electrical, IP66, IK10. Housing, canopy and spigot: die-cast aluminium (EN AC-47100) powder coated anthracite (close to RAL7043).. Enclosure: 6mm thick clear glass.. Complete with 4000K LED. Post top mounting to Ø60mm column, tilt 5°, adjustable from 0° to +10°.

Surge protection: 10kV single pulse common mode and 8kV multipulse common mode and 6kV multipulse differential mode. If permanent DALI system is connected, 6kV multipulse common and differential mode.

Dimensions: 435 x 436 x 200 mm
Luminaire input power: 38 W
Luminaire luminous flux: 5537 lm
Luminaire efficacy: 146 lm/W
Weight: 8.5 kg
Scx: 0.054 m²

TLG_FLOW_F_MTP_CL.jpg

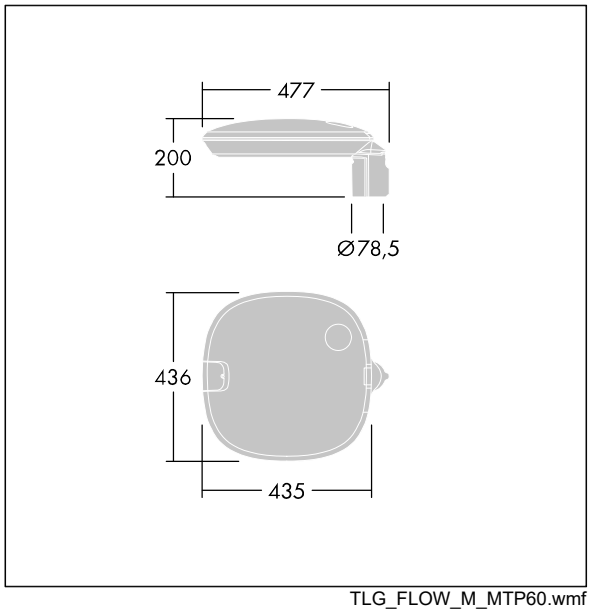

TLG_FLOW_M_MTP60.wmf

This product contains a light source of energy efficiency class D.

All values marked with an * are rated values. Thorn uses tried and tested components from leading suppliers, however there may be isolated instances of technology-related failures of individual LEDs during the rated product lifetime. International standards set the tolerance in initial flux and connected load at ±10%. Unless stated otherwise, the values apply to an ambient temperature of 25°C.

Thorn Lighting is constantly developing and improving its products. The right is reserved to change specifications without prior notification or public announcement.
© Thorn Lighting

Flow

92940344 FW 24L50 740 NR CL2 T60F ANT

Thorn Lighting is constantly developing and improving its products. The right is reserved to change specifications without prior notification or public announcement.
© Thorn Lighting