Avenue F2

E7749584 / 96672117 AVF F 18L35-730 RSC CL2 CON T60 ANT

ISO 9223 C3	IDA DARK SKY APPROVED	IP66	IK08		CE	T_a25

Avenue F2

Decorative post-top lantern with 18 LEDs driven at 350mA and a radial symmetrical comfort optic with minimum upward light.. Class II electrical, IP66, IK08. Base and arms: die-cast aluminium (EN AC-46000), Canopy: spun aluminium, texturized anthracite (close to RAL7043). Diffuser: clear polycarbonate. Screw fixings: stainless steel. Equipped with cable gland. Surge protection: 10kV single pulse common mode and 8kV multipulse common mode and 6kV multipulse differential mode. If permanent DALI system is connected, 6kV multipulse common and differential mode. Complete with 3000K LED

Post top mounting to a Ø60mm column, spigot internal length 100mm.

Dimensions: Ø700/720 x 500 mm
Luminaire input power: 21 W
Weight: 7.55 kg
Scx: 0.11 m²
Luminaire efficacy: 124 lm/W

TLG_AVNF_F_U1_3_AR2_1700.jpg

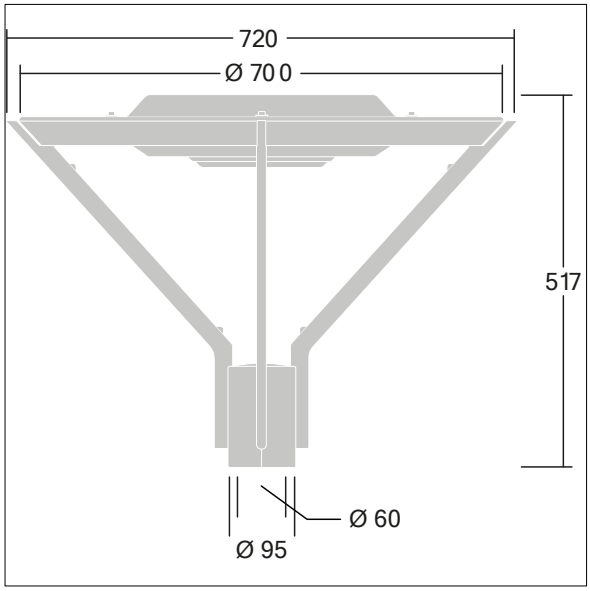

TLG_AVNF_M_U1.wmf

This product contains a light source of energy efficiency class D.

All values marked with an * are rated values. Thorn uses tried and tested components from leading suppliers, however there may be isolated instances of technology-related failures of individual LEDs during the rated product lifetime. International standards set the tolerance in initial flux and connected load at ±10%. Unless stated otherwise, the values apply to an ambient temperature of 25°C.

Thorn Lighting is constantly developing and improving its products. The right is reserved to change specifications without prior notification or public announcement.
© Thorn Lighting