Victoria

96681020 VICIA2 72L35-740 NR CL2 N8M R9006

IP65	IK08				

Victoria

A large size LED street and urban luminaire, in a modern and timeless design. 72 LEDs driven at 350mA with Narrow Road optic. Fixed output LED driver. Class II electrical, IP65. Body in aluminium, powder coated White aluminium RAL9006. Enclosure: toughened flat glass. Luminaire to be suspended using brackets (Ø27G), post top, or wall mounted. Tool-free electrical connection via 2 x 2.5 mm² terminal block. Pre-wired with 8m H07-RNF cable. Complete with 4000K LED

Must be used in conjunction with a canopy (see Victoria Canopies section), to be ordered separately.

Dimensions: Ø705 x 435 mm
Luminaire input power: 81 W
Weight: 9.36 kg
Scx: 0.228 m²

TLG_VCTA_F_PDB.jpg

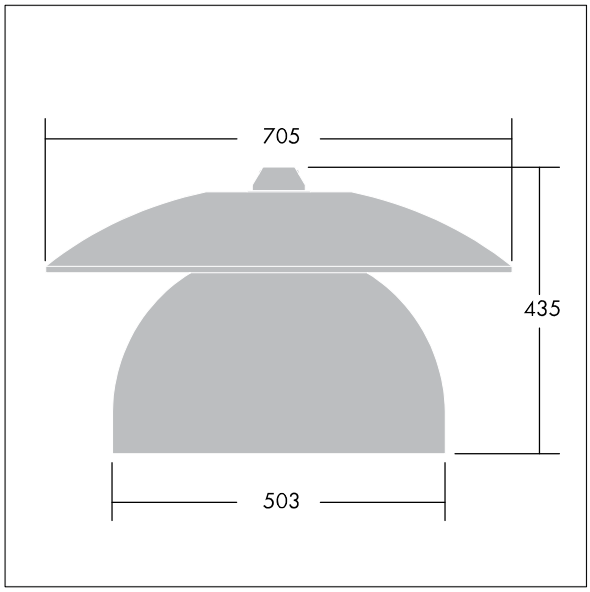

TLG_VCTA_M_SWLD2.wmf

This product contains light sources of energy efficiency classes D, F.

All values marked with an * are rated values. Thorn uses tried and tested components from leading suppliers, however there may be isolated instances of technology-related failures of individual LEDs during the rated product lifetime. International standards set the tolerance in initial flux and connected load at ±10%. Unless stated otherwise, the values apply to an ambient temperature of 25°C.

Thorn Lighting is constantly developing and improving its products. The right is reserved to change specifications without prior notification or public announcement.
© Thorn Lighting

Victoria

96681020 VICIA2 72L35-740 NR CL2 N8M R9006

Thorn Lighting is constantly developing and improving its products. The right is reserved to change specifications without prior notification or public announcement.
© Thorn Lighting