Areaflood Pro 2

96635899 AFP2 S 24L35-740 A4 CL1 GY

ISO 9223 C5 | UKCA | IP66 | IK08 | CE | 0,5m

Areaflood Pro 2

A compact, lightweight, general purpose LED area floodlight. With small body. LED converter driving 24 LEDs at 350mA with Asymmetrical 40° light distribution. IP66, IK08, Class I electrical. Body: die-cast aluminium (EN AC-44300), Light grey 150 sanded textured (close to RAL9006).. Enclosure: 4mm thick toughened glass. Reversable mounting stirrup supplied, optional spigot adaptors available separately for post top mounting. Complete with 4000K LED.

Integrated 6kV surge protection included as standard, with higher 10kV protection when selected (designated by 'SP' in the description).

Dimensions: 429 x 349 x 99 mm
Luminaire input power: 26 W
Luminaire luminous flux: 4404 lm
Luminaire efficacy: 169 lm/W
weight: 6.79 kg
Scx: 0.052 m²

TLG_AFP2_F_S_1.jpg

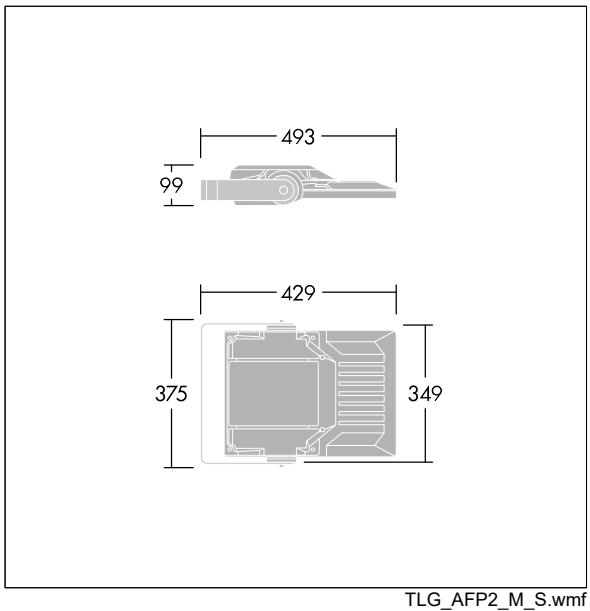

TLG_AFP2_M_S.wmf

This product contains a light source of energy efficiency class D.

All values marked with an * are rated values. Thorn uses tried and tested components from leading suppliers, however there may be isolated instances of technology-related failures of individual LEDs during the rated product lifetime. International standards set the tolerance in initial flux and connected load at ±10%. Unless stated otherwise, the values apply to an ambient temperature of 25°C.

Thorn Lighting is constantly developing and improving its products. The right is reserved to change specifications without prior notification or public announcement.
© Thorn Lighting

Areaflood Pro 2

96635899 AFP2 S 24L35-740 A4 CL1 GY

Thorn Lighting is constantly developing and improving its products. The right is reserved to change specifications without prior notification or public announcement.
© Thorn Lighting