Urba

96671790 UA 24L70-740 NR CL1 T60E ANT

ISO 9223 C5	IP66	IK09				

Urba

A small size LED urban street lighting lantern with 24 LEDs driven at 700mA with narrow road optic. Electronic, fixed output control gear. Class I electrical, IP66, Impact strength: IK09. Body: die-cast aluminium (EN AC-44300), textured anthracite. Cover: tempered flat clear glass. Fixings: stainless steel with anti-galvanic treatment. Post top mounting to Ø60mm column. Complete with 4000K LED.

Surge protection: 10kV single pulse common mode and 8kV multipulse common mode and 6kV multipulse differential mode. If permanent DALI system is connected, 6kV multipulse common and differential mode.

Dimensions: 738 x 336 x 345 mm
Luminaire input power: 52 W
Weight: 10.5 kg
Scx: 0.08 m²

TLG_URBA_F_SMTPGYPDB.jpg

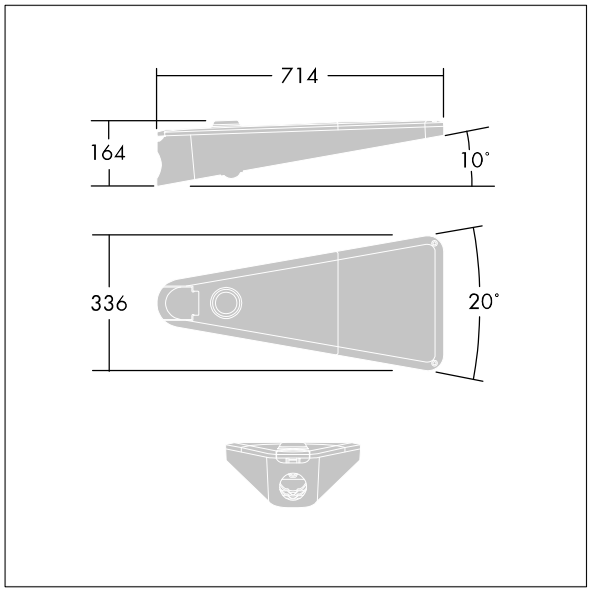

TLG_URBA_M_LD1S.wmf

This product contains a light source of energy efficiency class D.

All values marked with an * are rated values. Thorn uses tried and tested components from leading suppliers, however there may be isolated instances of technology-related failures of individual LEDs during the rated product lifetime. International standards set the tolerance in initial flux and connected load at ±10%. Unless stated otherwise, the values apply to an ambient temperature of 25°C.

Thorn Lighting is constantly developing and improving its products. The right is reserved to change specifications without prior notification or public announcement.
© Thorn Lighting

Urba

96671790 UA 24L70-740 NR CL1 T60E ANT

Thorn Lighting is constantly developing and improving its products. The right is reserved to change specifications without prior notification or public announcement.
© Thorn Lighting